REVISIONS				
ZONE	REV	DESCRIPTION	DATE	APPROVED

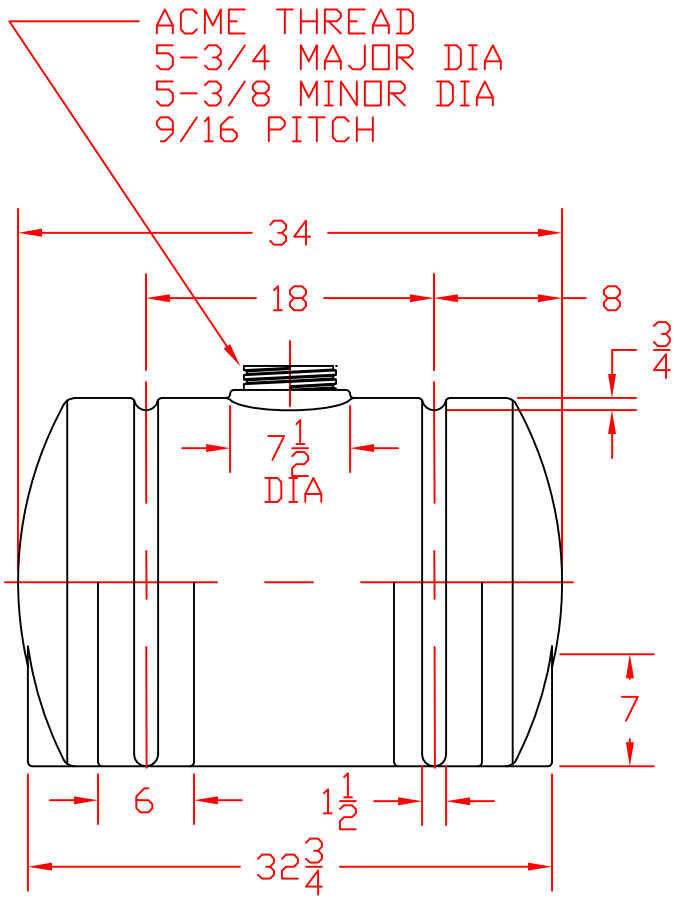

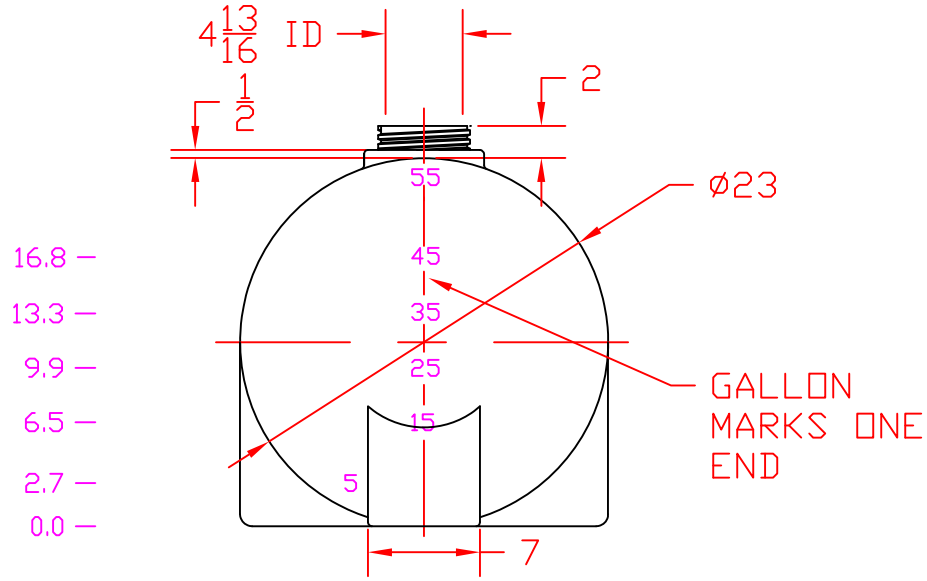

NORWESCO
ST. BONIFACIUS, MN

55 GALLON HORIZONTAL TANK

JTP 25AUG03	SIZE A	FSCM NO.	DWG NO. 41873	REV
	SCALE 1/12		SHEET	